ECO NO.	DATE	REV.	REVISION RECORD	AUTH.	DR.BY
2129	2-26 93	A	ADDED 51A AND 72A ALT. DIAGRAMS		WRM
2461	6-6 94	B	DELETED JUMPER FROM PRESTOLITE 72 AMP. ALTERNATOR		MKM
2476	8-19 94	C	CHANGED #14 BLK TO #14 RED IN THE ADMIRAL PANEL. CHANGED #16 BLK TO #10 RED IN THE ADMIRAL PANEL.		MKM
2525	9-20 94	D	ALL BLACK WIRES IN THE ADMIRAL PANEL WERE GREEN; REVISED DIAGRAM OF OPTIONAL LESTER ALTERNATORS TO CORRECT CONFIGURATION.		WRM
2922	2-29 96	F	ADDED RESISTOR WIRE BETWEEN "I" TERMINAL OF PREHEAT SOLENOID AND GND		HFV
2922	2-29 96	F	IN OPT. ALTERNATORS, BROWN WIRE WAS NOT USED, ORANGE WIRE WAS CONNECTED TO WIRES 10 AND 9.		HFV
4131	6/24 99	G	ADDED LEECE - NEVILLE 90 AMP ALTERNATOR AND A 50 AMP MITSUBISHI ALTERNATOR WIRE #14 BLACK WAS #14 GREEN.		JRS
4707	9/13 00	H	ADDED M50B TO THE WIRING DIAG.		BJS
5082	10/24 01	J	ADDED CURRENT TIMER		TSM

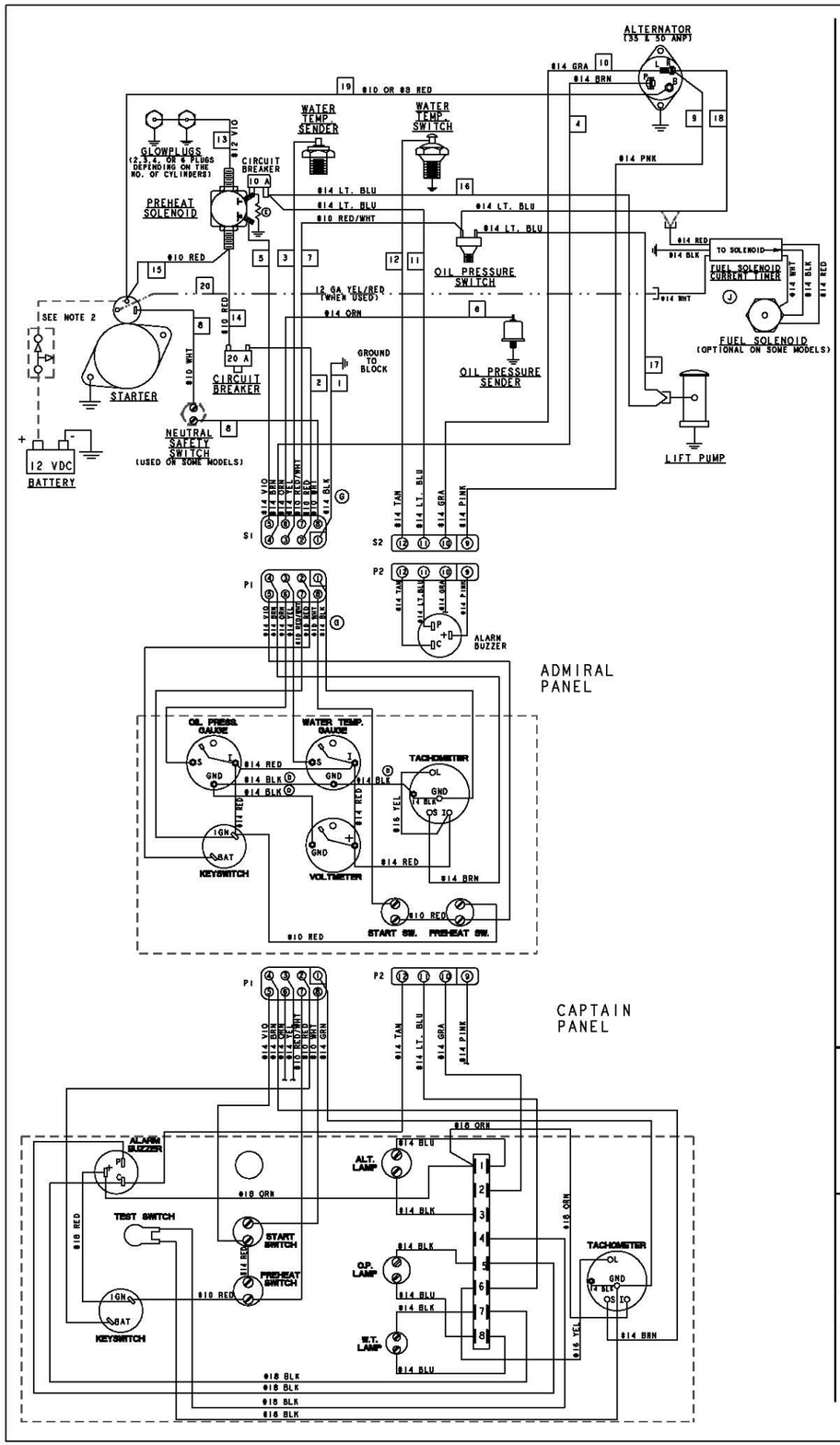

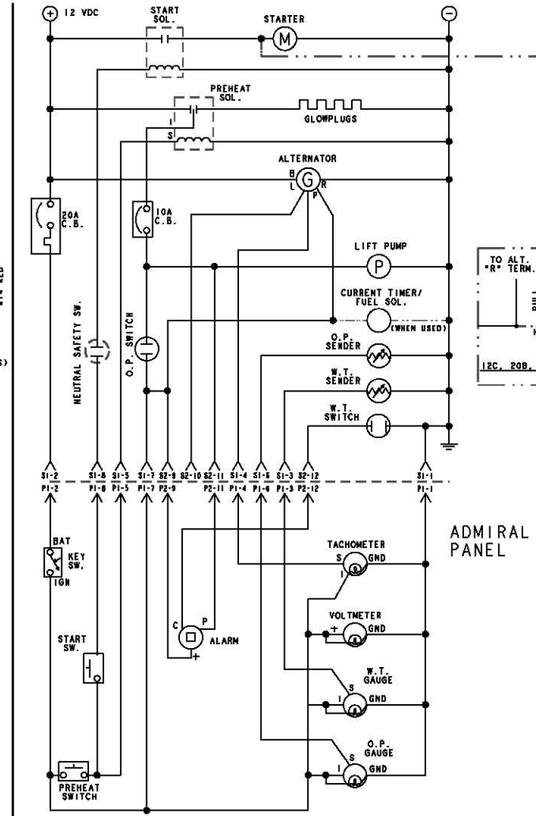

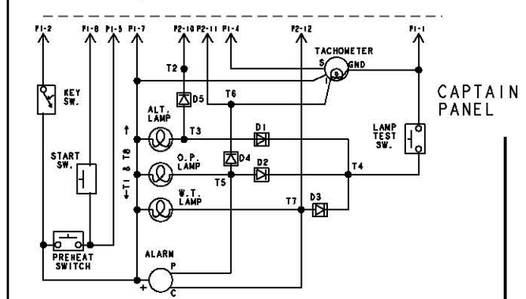

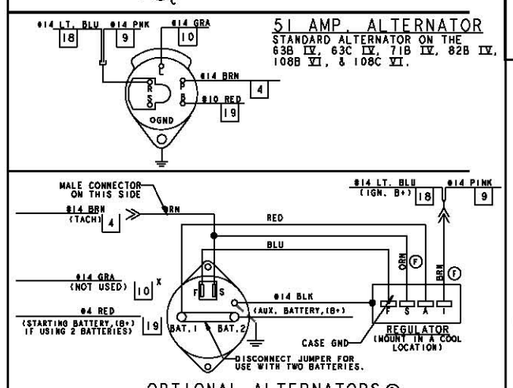

51 AMP. ALTERNATOR

STANDARD ALTERNATOR ON THE 63B IV, 63C IV, 71B IV, 82B IV, 108B VI, & 108C VI.

OPTIONAL ALTERNATORS (B)

135A, 160A, 190A, LESTEK ALTERNATORS
AVAILABLE ON THE M50B, 63B IV, 63C IV, 71B IV, 82B IV, 108B VI, & 108C VI ONLY.
(B)

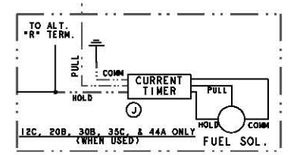

NOTES:

1. THIS PRODUCT IS PROTECTED BY A MANUAL RESET CIRCUIT BREAKER LOCATED NEAR THE STARTER. EXCESSIVE CURRENT WILL CAUSE THE BREAKER TO TRIP AND THE ENGINE WILL SHUT DOWN. THE BUILDER/OWNER MUST BE SURE THAT THE INSTRUMENT PANEL, WIRING, AND ENGINE ARE INSTALLED TO PREVENT CONTACT BETWEEN ELECTRICAL DEVICES AND SEAWATER.
2. AN ON-OFF SWITCH SHOULD BE INSTALLED BETWEEN THE BATTERY AND STARTER TO DISCONNECT THE BATTERY IN AN EMERGENCY AND WHEN LEAVING THE BOAT. A SWITCH WITH A CONTINUOUS RATING OF 175 AMPS. AT 12 VDC WILL SERVE THIS FUNCTION. THIS SWITCH SHOULD NOT BE USED TO MAKE OR BREAK THE CIRCUIT.
3. THE PINK WIRE AT PLUG 2 IS UNUSED AND SHOULD BE INSULATED, CAPTAIN PANEL ONLY.
4. THE GRAY WIRE AT PLUG 2 IS UNUSED AND SHOULD BE INSULATED, ADMIRAL PANEL ONLY.

MITSUBISHI 50 AMP ALT.

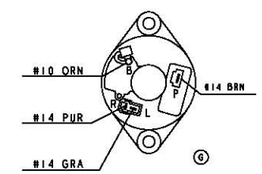

PRESTOLITE\LEECE-NEVILLE 90 AMP. ALT.

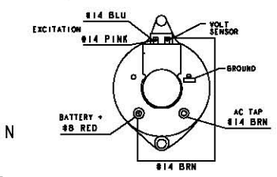

NOTE:
WIRE FOR BATTERY ATTATCHMENT WILL NEED TO BE UPGRADED TO AN 8 GAUGE FROM 10 GAUGE

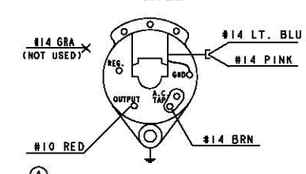

(A) PRESTOLITE 72 AMP. ALT.

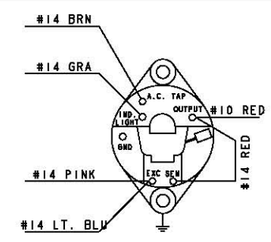

(A) UNIVERSAL PROPULSION PRESTOLITE 51 AMP. ALT.

TOLERANCES		WESTERBEKE CORPORATION AVON MA. 02322		
UNLESS OTHERWISE NOTED		TITLE		
INCHES	MILLIMETERS	WIRING DIAGRAM - ALL MARINE DIESEL PROPULSION ENGINES		
.XX ±.03	.X ±.1	DRAWN BY MRM	DATE 12 JAN 01	MATERIAL
.XXX ±.005	.XX ±.13	APPROVED BY	DATE	
ANGLES ±1°		SCALE NTS	SIZE E	DRAWING NUMBER 39144
FINISH		SHT. 1 OF 1		REV. J
DIMENSIONS INCHES / MILLIMETERS				