ECO NO.	DATE	REV.	REVISION RECORD	AUTH.	DR.BY
6221	6/14/2006	A	RELEASED		AFS

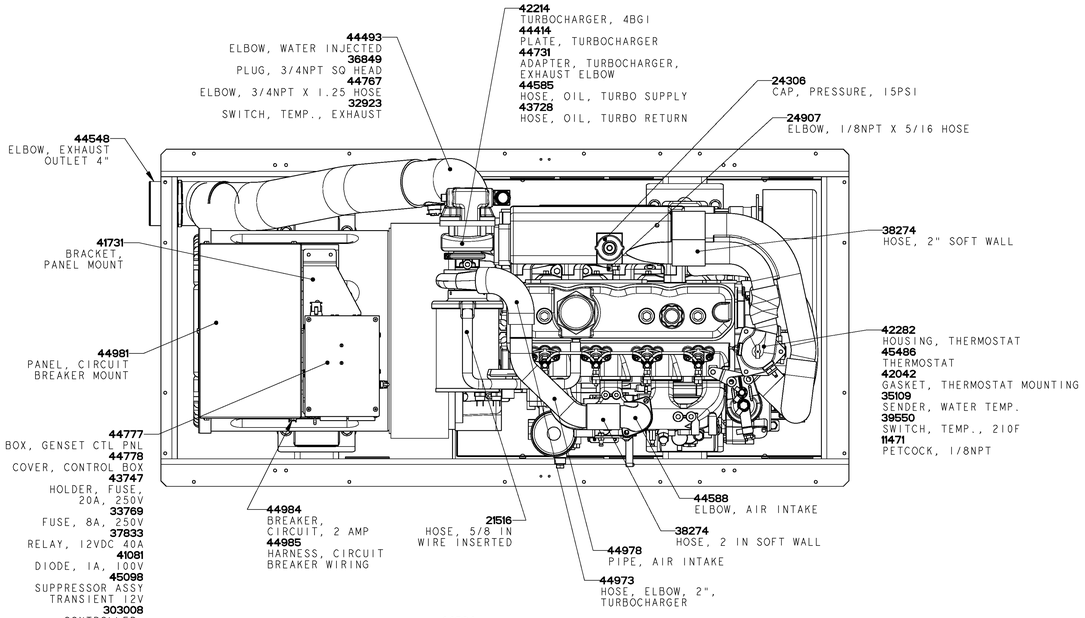

FAST MOVING PARTS					
49605	(B) ALTERNATOR, 12V 50A	**36192**	HOURMETER, 12V	**48177**	SPARE PARTS KIT A
38530	ALTERNATOR, 24V 42A	**42159**	HOURMETER, 24V	**48178**	SPARE PARTS KIT B-NATURALLY ASP.
44044	BELT, GUARD	**48139**	INJECTOR - NATURALLY ASP.	**48184**	SPARE PARTS KIT B-TURBOCHARGED
44385	BELT, WATER PUMP-ALTERNATOR	**48144**	INJECTOR - TURBOCHARGED	**303007**	SOLENOID, FUEL CONTROL 12V
24306	CAP, PRESSURE	**42490**	ISOLATORS	**39746**	SOLENOID, FUEL CONTROL 24V
20946	CIRCUIT BREAKER, 10A 24VDC	**45140**	MANUAL, OPERATOR	**45561**	SOLENOID, FUEL STOP 12V
36563	CIRCUIT BREAKER, 10A 12VDC	**36650**	OIL COOLER	**45562**	SOLENOID, FUEL STOP 24V
24683	CIRCUIT BREAKER, 20A 12VDC	**35110**	OIL PRESSURE METER 12V	**24639**	SOLENOID, PREHEAT 12V
43577	DIPSTICK	**42157**	OIL PRESSURE METER 24V	**22249**	SOLENOID, PREHEAT 24V
33259	EMERGENCY STOP SWITCH	**24132**	OIL PRESSURE SENDER 12V	**43472**	STARTER MOTOR 12V
32923	EXHAUST TEMPERATURE SWITCH	**42161**	OIL PRESSURE SENDER 24V	**39417**	STARTER MOTOR 24V
43930	FILTER, AIR	**37323**	OIL PRESSURE SWITCH 5#	**24732**	SWITCH, PREHEAT & START
46140	FILTER, FUEL OIL	**11552**	OIL PRESSURE SWITCH 10#	**24731**	SWITCH, STOP
44995	FILTER, LUBE OIL	**13758**	PAINT, RED AEROSOL	**39826**	TACHOMETER, ADMIRAL PANEL
33769	FUSE, 8 AMP	**42307**	PAINT, WHITE AEROSOL	**24977**	TANK, COOLANT RECOVERY
48176	GASKET SET, COMPLETE	**36842**	PANEL KIT, ADMIRAL 12V	**45486**	THERMOSTAT
48175	GASKET SET, UPPER	**46637**	PANEL KIT, ADMIRAL 24V	**42042**	THERMOSTAT MOUNTING GASKET
47353	GASKET, HEAD	**36539**	PANEL, GENSET CONTROL 12V	**47351**	VALVE COVER GASKET
45444	GASKET, OIL PAN	**42162**	PANEL, GENSET CONTROL 24V	**42336**	VOLTAGE REGULATOR
48130	GLOWPLUG, 12V	**44336**	PANEL, REMOTE START/STOP 15 PIN	**35111**	VOLTMETER 12V
45124	GLOWPLUG, 24V	**47354**	PUMP, FRESH WATER	**42156**	VOLTMETER 24V
36557	HARNESS 15 FT. EXT 4 PIN	**47323**	PUMP, IMPELLER KIT	**44495**	WATER INJ. EXHAUS ELBOW NAT. ASP.
30760	HARNESS 15 FT. EXT 8 PIN	**47352**	PUMP, MOUNTING GASKET	**44493**	WATER INJ. EXHAUST ELBOW TURBO
44347	HARNESS EXT 15 PIN, 15'-30'	**44183**	PUMP, MOUNTING O-RING	**35108**	WATER TEMPERATURE METER 12V
44791	HEAT EXCHANGER	**47324**	PUMP, REPAIR KIT	**42158**	WATER TEMPERATURE METER 24V
42053	HEAT EXCHANGER END CAP	**43514**	PUMP, SEA WATER	**35109**	WATER TEMPERATURE SENDER
42054	HEAT EXCHANGER GASKET	**44995**	REMOTE LUBE OIL FILTER	**39550**	WATER TEMPERATURE SWITCH
44131	HEAT EXCHANGER O-RING			**44782**	WIRING HARNESS
47305	HOSE KIT, WATER			**11885**	ZINC
ITEMS NOT SHOWN					
44782	HARNESS, GENSET 4-6BGI				

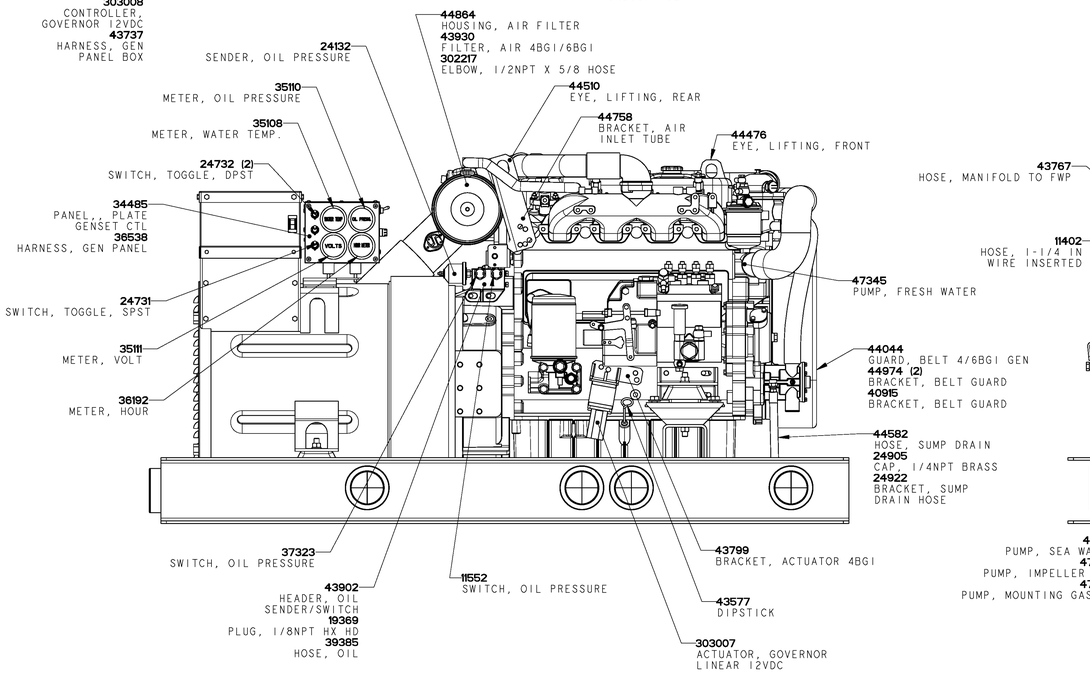

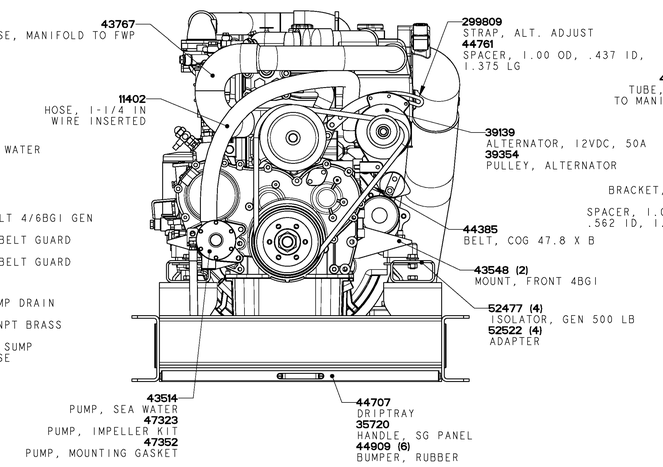

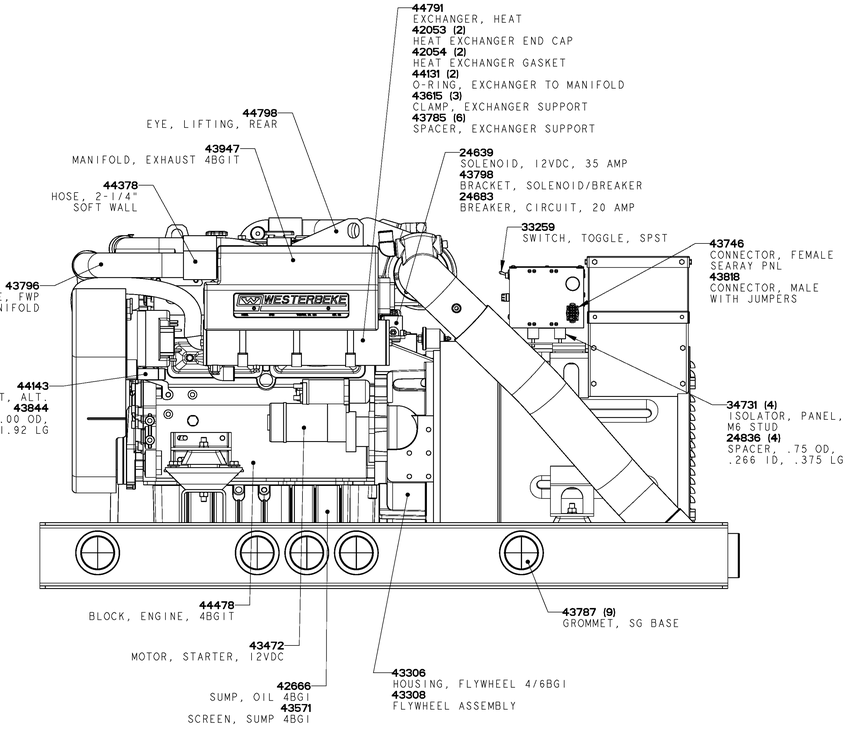

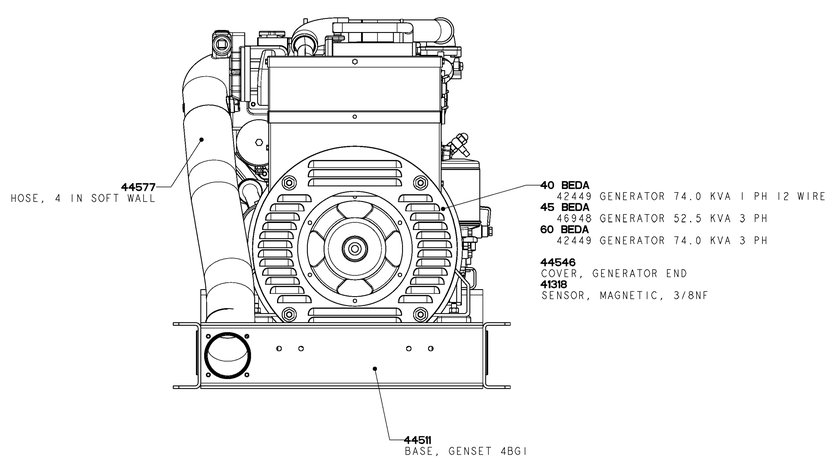

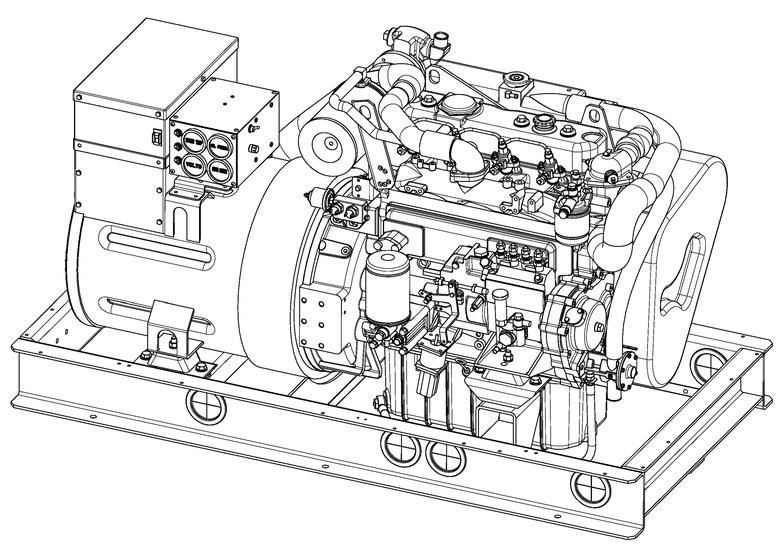

TOLERANCES (UNLESS OTHERWISE NOTED)	WESTERBEKE CORPORATION TAUNTON, MA. 02780			
INCHES: .XX ±.02, .XXX ±.005, CAST ±.03, ANGLES: ±.5°, FINISH 32 / MILLIMETERS: X. ±, .X ±, .XX ±	TITLE: PARTS LIST 40-60 BEDA			
	DRAWN BY: AFS	DATE: 9/Jun/03	MATERIAL: ---	
DIMENSIONS: INCHES / MILLIMETERS (WHEN APPLICABLE)	APPROVED BY	DATE	---	
	SCALE: 0.188	SIZE: E	DRAWING NUMBER: 52759	REV: A
	SHT. 1 OF 1			